Roll No.												

PRESIDENCY UNIVERSITY

BENGALURU

End - Term Examinations – December 2025

Date: 17 – 12- 2025 **Time:** 01:00pm – 04:00pm

School: SOE	**Program:** B. Tech	
Course Code: CIV3027	**Course Name:** Foundation Engineering	
Semester: V	**Max Marks**: 100	**Weightage**: 50%

CO - Levels	**CO1**	**CO2**	**CO3**	**CO4**	**CO5**
Marks	**19**	**29**	**18**	**44**	**44**

Instructions:

(i) Read all questions carefully and answer accordingly.

(ii) Do not write anything on the question paper other than roll number.

Part A

Answer ALL the Questions. Each question carries 2marks. **10Q x 2M=20M**

1.	List the various methods of finding the slope stability.	**2 Marks**	**L1**	**CO1**
2.	Explain Infinite and Finite slopes with a neat sketch.	**2 Marks**	**L1**	**CO1**
3.	Determine the factor of safety with respect to strength and cohesion for a submerged embankment 25 m high. Assume c=40kN/m^2, φ=10^0 and γsat=18 kN/m^3 with Taylor's stability number Sn=0.097.	**2 Marks**	**L1**	**CO2**
4.	A concentrated load of 2000 kN is applied at the ground surface. Determine the vertical stress at a point P which is 6 m directly below the load. Use Boussinesq's theory for point loads.	**2 Marks**	**L1**	**CO2**
5.	Explain earth pressure at rest with a neat sketch.	**2 Marks**	**L1**	**CO3**
6.	Compute active earth pressure for a retaining wall 10 m height for a cohesion less soil with angle of internal friction φ=20^0 and γ=18 kN/m^3.	**2 Marks**	**L3**	**CO3**
7.	Explain the significance of finding the earth pressure of soil.	**2 Marks**	**L1**	**CO3**
8.	Explain safe bearing capacity and allowable bearing capacity of soil.	**2 Marks**	**L1**	**CO4**
9.	Explain composite piles.	**2 Marks**	**L1**	**CO5**
10.	Explain pile foundations.	**2 Marks**	**L1**	**CO5**

Part B

Answer the Questions. **Total Marks 80M**

11.	**a.**	The shear strength parameters of soil are C'= 26.7 kPa, φ'=15^0, C'm= 17.8 kPa, φ'm=12^0, Calculate the factor of safety a) with respect to strength b) with respect to cohesion, c) with respect to friction. The average inter granular pressure σ'=102.5 kPa.	**5 Marks**	**L3**	**CO1**
	b.	A concentrated load of 50 kN acts on the surface of the soil. Determine the vertical stress variation at points directly beneath the load up to a depth of 10 m and draw a plot. Also plot the variation of vertical stress due to load on horizontal planes at depths of 1m and 3m up to a horizontal distance of 3 m on either side of center. Use Boussinesq's theory for point loads.	**15 Marks**	**L3**	**CO2**

or

12.	**a.**	Explain the various types of slope failure with a neat sketch.	**10 Marks**	**L1**	**CO1**
	b.	A concentrated load of 2000 kN is applied at the ground surface. Determine the vertical stress at a point P which is 6 m directly below the load. Also calculate the vertical stress at a point R which is at a depth of 6 m but at a horizontal distance of 5 m from the axis of the load.	**10 Marks**	**L3**	**CO2**

13.	**a.**	Develop the expression for Rankine's earth pressure theory for cohesive soil for passive case.	**10 Marks**	**L1**	**CO3**
	b.	Determine the stresses at the top and bottom of the cut shown below. Also determine the maximum depth of the potential crack and the maximum depth of unsupported excavation. 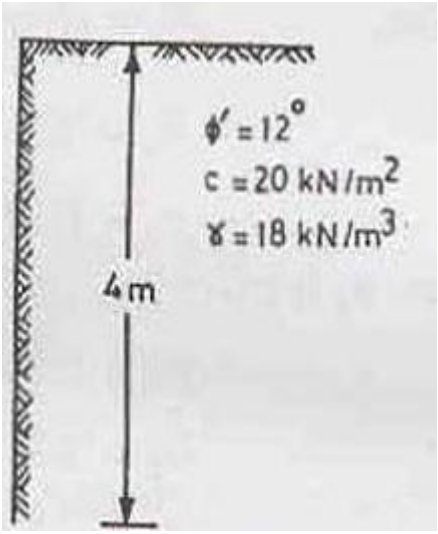	**10 Marks**	**L3**	**CO3**

or

14.	**a.**	A retaining wall 10 m high retains soil as shown in the Fig. Determine the resultant active force and its point of application. 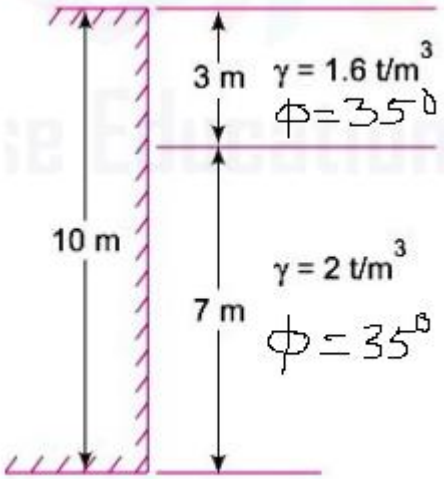 	**10 Marks**	**L3**	**CO3**
	b.	Determine the passive earth pressure per unit length of the wall shown in figure below. The water table is at the level of B. Take γ_w=10 kN/m³. 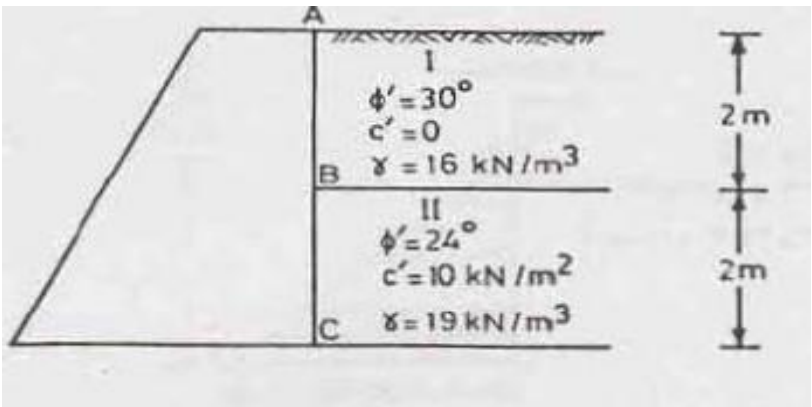 	**10 Marks**	**L3**	**CO3**

15.		A strip footing 3 m wide carries a load intensity of 400 kPa at a depth of 1.2 m in sand. The saturated unit weight of sand is 19.5 kN/m3 and unit weight above water table is 16.8 kN/m3. The shear strength parameters are c=0 and φ=350. Determine the factor of safety for the following cases of water table a) Water table is 4 m below GL (ground line), b) Water table is 1.2 m below GL, c) Water table is 2.5 m below GL, d) Water table is 0.5 m below GL and e) Water table is at ground level itself. Assume Nq=41.4 and Nγ=42.4.	**20 Marks**	**L3**	**CO4**

Or

16.	**a.**	A square footing 2.5 m by 2.5 m is built in a homogeneous bed of sand of unit weight 20 KN/m3 and having an angle of shearing resistance of 36 degrees. The depth of base of footing is 1.5 m below the ground surface. Calculate the safe load that can be carried by a footing with a factor of safety of 3 against complete shear failure. Take Nc=65.4, Nq= 49 .4 and Nγ=54.	**10 Marks**	**L3**	**CO4**

	b.	Investigations were made at three sites of office buildings to determine the type of bearing capacity failure. The bearing capacity of the soil was not adequate. The analysis were carried out to find that the failure is due to general shear failure, punching shear failure and local shear failure. Explain these failures with a neat sketch.	**10 Marks**	**L1**	**CO4**

17.	**a.**	Negative skin friction occurs in friction piles and are also called as floating piles. Explain with a neat sketch friction piles.	**10 Marks**	**L1**	**CO5**
	b.	A 30 cm diameter concrete pile is driven into a homogeneous consolidated clay deposit with cohesion 40 kN/m^2, with adhesion factor α=0.7. If the embedded length is 10 m, Estimate safe load of the pile with Factor of safety=2.5.	**10 Marks**	**L3**	**CO5**

Or

18.	**a.**	A. pile group consists of 16 friction piles of 60 cm diameter and 10 m length driven in clay as shown in Fig. (Cu= 30 kN/m^2 and γ=20kN/m^3. Determine the safe load for the group. FS=3 and α=0.6 (adhesion factor) as shown in Fig. Determine the safe load for the group. 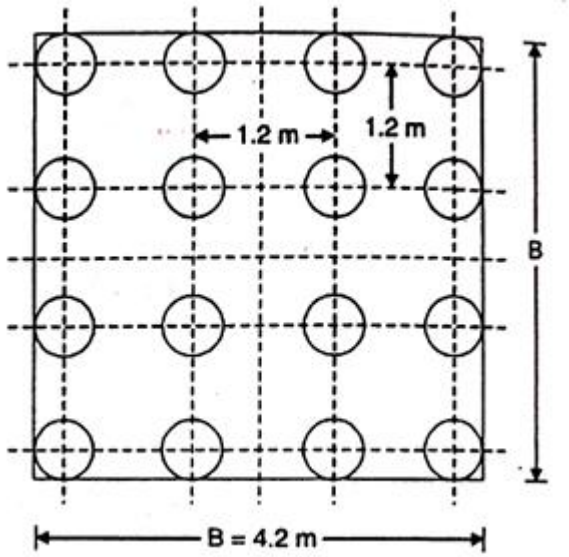	**15 Marks**	**L3**	**CO5**
	b.	Explain the various types of piles based on their use.	**5 Marks**	**L1**	**CO5**